MALE PIN-OUT

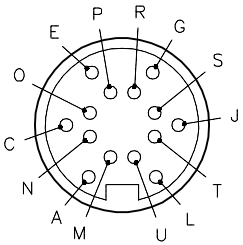

M16 connector

T = PINK
J = GREY
S = YELLOW
G = GREEN
R = WHITE
U = BLUE
M = BROWN
P = RED
E = BLACK
O = VIOLET
C = ORANGE
N = TAN
A = DRAIN

CONNECTORS (J1-J10)

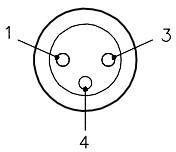

picofast.

WIRING DIAGRAM

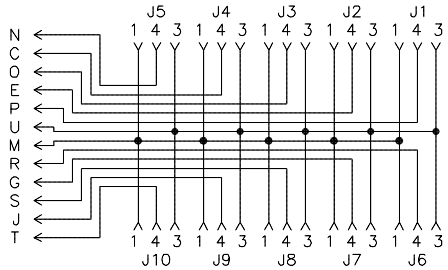

SPECIFICATIONS

CABLE JACKET/COLOR	PVC/BLACK
NUMBER OF CONDUCTORS [AWG]	12x24 AWG, FOIL SHIELD, 26 AWG DRAIN
HOUSING MATERIAL/COLOR	PA 6 NYLON/BLACK
CONTACT CARRIER MATERIAL/COLOR	TPU/BLACK
CONTACT MATERIAL	GOLD-PLATED BRASS
OPERATING VOLTAGE	48 V AC/DC
OPERATING CURRENT	2 AMPS PER PORT, 2 AMPS TOTAL
COUPLING NUT MATERIAL (BSMK)	NYLON
MOLDED HEAD MATERIAL (BSMK)	TPU/RED
PROTECTION CLASS to DIN 40050	IP 67 – ONLY WHEN ALL RECEPTACLES ARE COVERED WITH PLUGS OR CONNECTED
OPERATING TEMPERATURE	-30°C to +80°C (-22°F to +176°F)

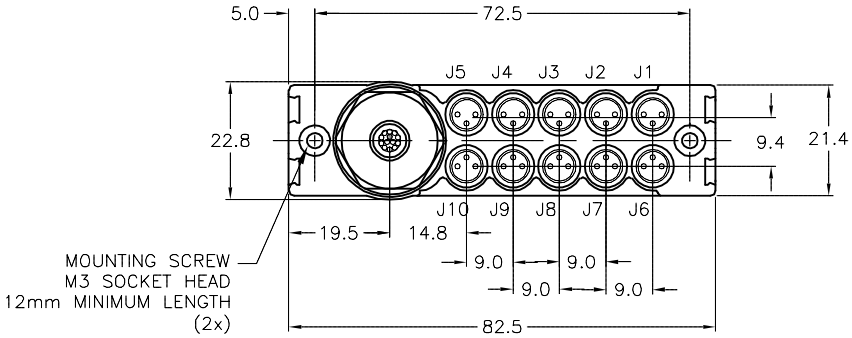

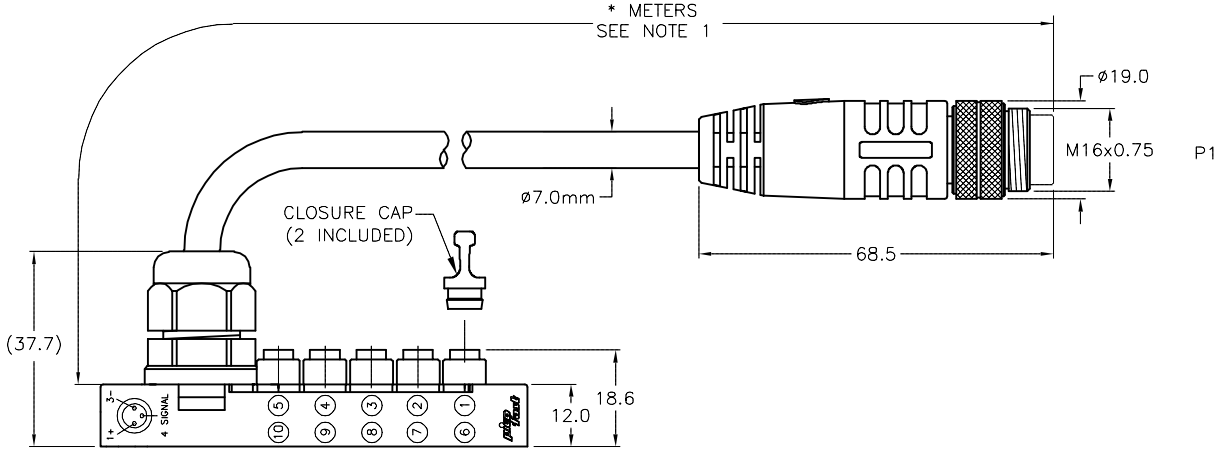

CABLE LENGTH	TOLERANCE *
ALL LENGTHS	+ 4% (OR 50mm) OF LENGTH - 0% (OR 0mm) OF LENGTH WHICHEVER IS GREATER
STRIP LENGTH	**TOLERANCE ***
0-7mm	±0.5mm
8-29mm	±1.0mm
30-49mm	±2.0mm
50-69mm	±3.0mm
70-100mm	±4.0mm
OVER 100mm	±5.0mm
* UNLESS OTHERWISE SPECIFIED	

SOURCE DRAWING - FOR REFERENCE ONLY

NOTES:

1. "*" INDICATES CABLE LENGTH IN METERS. CONTACT TURCK TO ORDER SPECIFIC LENGTHS.

2. "/S653" DESIGNATES DRAIN WIRE CONNECTED TO PIN A.

3. "/S1055" INDICATES MOLDED RED PLUG BODY.

REV	DESCRIPTION	BY	DATE	ECO NO.
F	UPDATE OPERATING CURRENT	RDS	02/01/18	63903

RELATED DOCUMENTS
1.
2.
3.
4.

3RD ANGLE PROJECTION

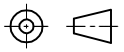

THIS DRAWING IS CONFIDENTIAL AND THE PROPERTY OF TURCK INC. USE OF THIS DOCUMENT WITHOUT WRITTEN PERMISSION IS PROHIBITED.

TURCK

3000 CAMPUS DRIVE
MINNEAPOLIS, MN 55441
1-800-544-7769
(763) 553-7300
(763) 553-0708 fax
www.turck.us

MATERIAL: SEE SPECIFICATIONS

FINISH: SEE SPECIFICATIONS

ALL DIMENSIONS DISPLAYED ON THIS DRAWING ARE FOR REFERENCE ONLY

CONTACT TURCK FOR MORE INFORMATION

DRFT: RDS | DATE: 08/27/03
APVD: | SCALE: 1=1.5

UNIT OF MEASUREMENT: **MILLIMETERS**

DO NOT SCALE THIS DRAWING

DESCRIPTION: VB 1003-*-BSMK 14/S653/S1055

IDENTIFICATION NO.:

REV: F

FILE: 777006659

SHEET 1 OF 1

Approved 04/26/2018, work order #162879 by T.S.